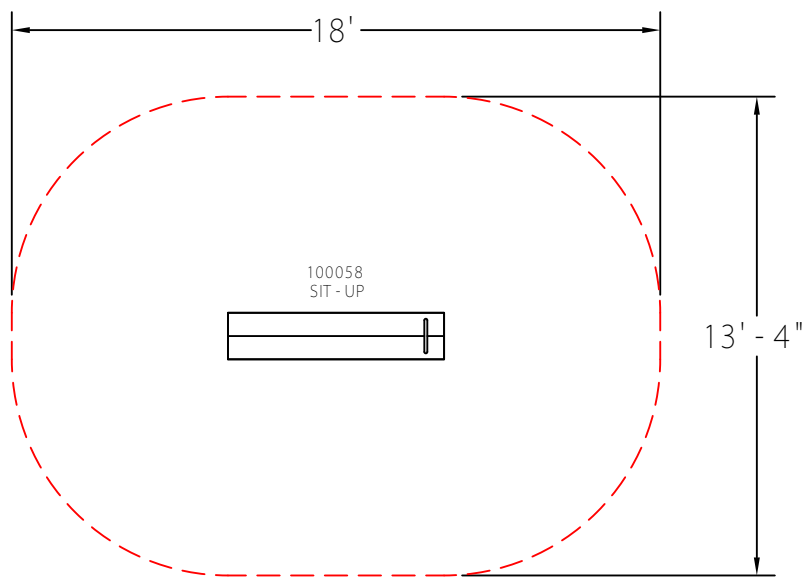

SCALE: IN FEET

0' 1' 5' 10'

THIS FITNESS AREA & EQUIPMENT IS DESIGNED FOR AGES 5-12 YEARS

THIS CONCEPTUAL PLAN WAS BASED ON INFORMATION AVAILABLE TO US. PRIOR TO CONSTRUCTION, DETAILED SITE INFORMATION INCLUDING SITE DIMENSIONS, TOPOGRAPHY, EXISTING UTILITIES, SOIL CONDITIONS, AND DRAINAGE SOLUTIONS SHOULD BE OBTAINED, EVALUATED, & UTILIZED IN THE FINAL DESIGN. PLEASE VERIFY ALL DIMENSIONS OF PLAY AREA, SIZE, ORIENTATION, AND LOCATION OF ALL EXISTING UTILITIES, EQUIPMENT, AND SITE FURNISHINGS PRIOR TO ORDERING.

THE EQUIPMENT SHOWN IS TO BE CONSIDERED FITNESS EQUIPMENT ONLY. APPROPRIATE SIGNAGE INDICATING THIS IS STRONGLY RECOMMENDED. IT IS ALSO RECOMMENDED THAT FITNESS EQUIPMENT BE LOCATED AWAY FROM PLAY EQUIPMENT TO DISCOURAGE PLAY.

DRAWING NOTES:

DESIGNED BY:
LSI

COPYRIGHT:
LANDSCAPE STRUCTURES, INC.

No.	Revision/Issue	Date

LANDSCAPE STRUCTURES INC
601 7th STREET SOUTH · P.O. BOX 148
DELANO, MINNESOTA 55328
PH. 1-800-328-0031 · FAX 1-763-972-6091

DESIGN # 945

LANDSCAPE STRUCTURES INC.

SYSTEM TYPE:
NO-STRUCTURE

DRAWING #: